This drawing is strictly confidential and must not be copied, reproduced, manufactured from, or passed to a third party without the written permission of Hercules Carparking Systems

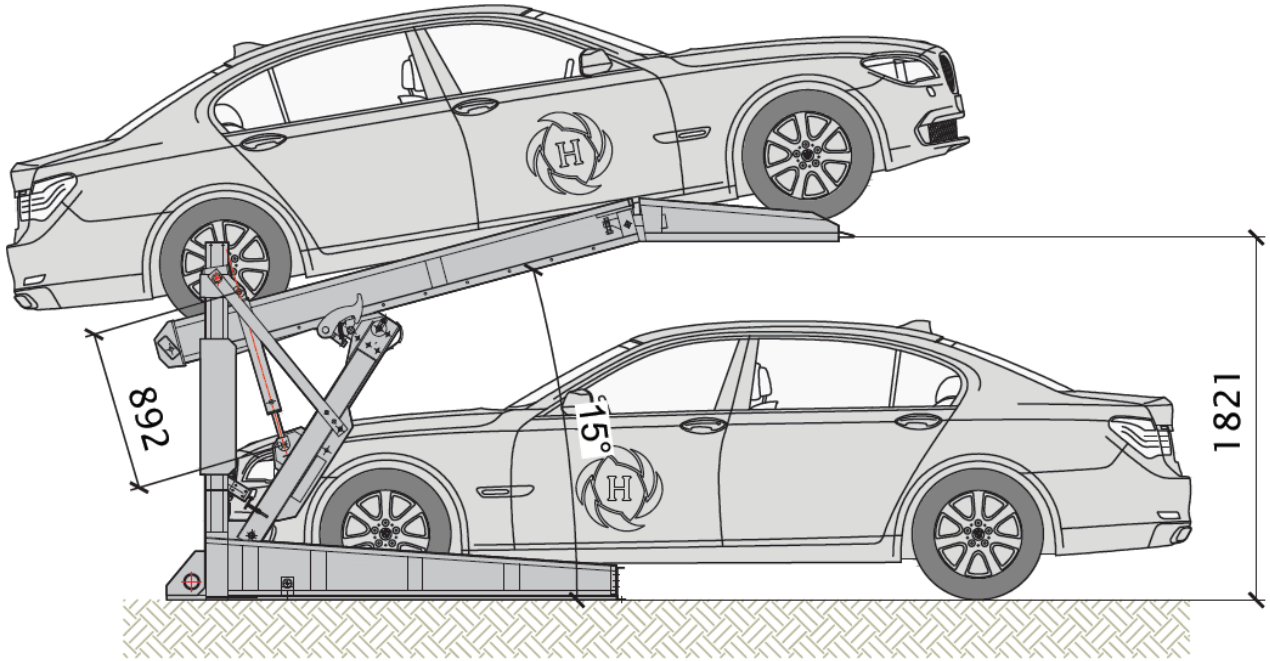

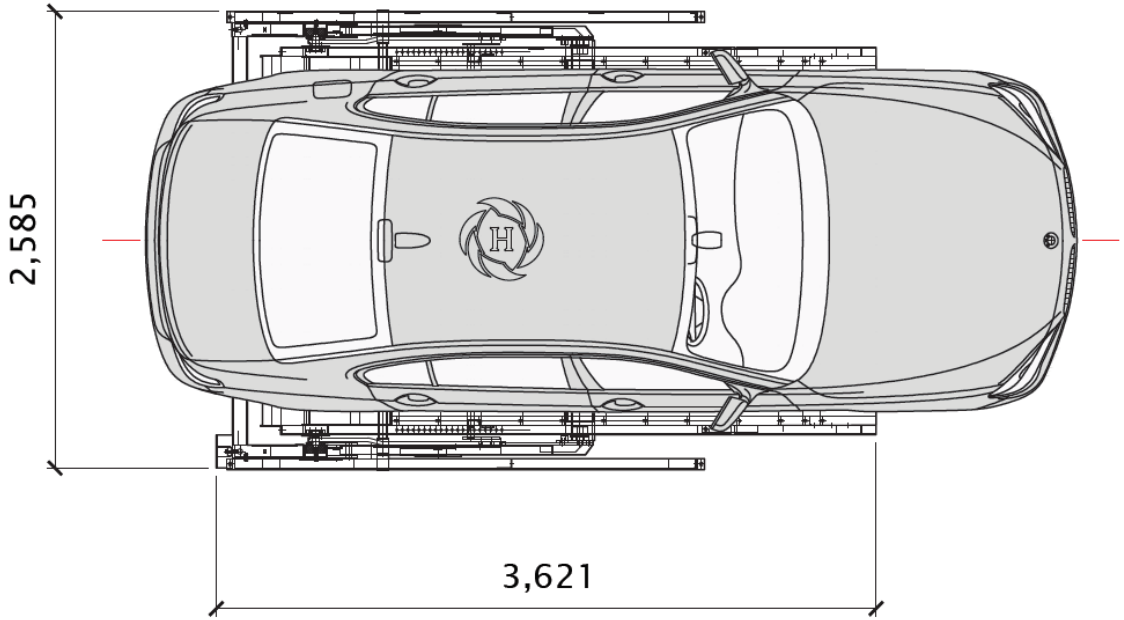

SPECIFICATIONS		
LIFTING CAPACITY	kg	2000
PARKING HEIGHT	mm	1550
PARKING WIDTH	mm	2100
PARKING LENGTH	mm	5000

NOTE:
1. MINIMUM INSTALLATION SPACE FOR PARKING SPACES
LENGTH: 6200mm, WIDTH: 2650mm, HEIGHT: 3100mm

				MODEL NAME	HCP – DY – AS15D21	JOB					TITLE	ANGLE STACKER	
				HERCULES CARPARKING SYSTEMS		DATE			SCALE		SUBJECT	LAYOUT	
						DRAW	DESIGNED	CHECKED	REVIEWED	APPROVED	FILE NAME	HCP – DY – AS15D21	REV.
DATE	REVISIONS & DESCRIPTION	ENG'R	APPR'D			San					DWG NO.	– –	